UNIT-III: OP-AMP and Applications

Syllabus

Differential amplifiers, Functional block diagram of operational amplifier, ideal operational amplifiers and parameters, OP AMP applications: Op-amp as Inverting and Non inverting amplifier, Summing amplifier, Comparator, Integrator and differentiator.

Differential Amplifier

- The amplifier which amplifies the difference between two input signals is called as Differential amplifier. The differential amplifier configuration is very much popular and it is used in variety of analog circuits. It is basic building in operational amplifiers. Below figure shows the ideal differential amplifier.
- Here V1 and V2 are the two input signals of the Differential amplifier and Vo is the single ended output of Differential amplifier. In an ideal differential amplifier the output voltage Vo is proportional to the difference between two i

- $V_o \propto (V_1 - V_2)$

Differential Amplifiers

- Differential Gain:
- Differential gain is the gain with which amplifier amplifies the difference between two input signals. It is denoted as Ad.

$$Vo = Ad\ (Vd)$$

Where V_d is the voltage difference between two input signals i.e. $V_d = V1 – V2$

$$\mathbf{A_d = Vo / Vd}$$

- Differential gain in dB is given as

$$Ad(dB) = 20 \log10\ (Vo / Vd)$$

Differential Amplifiers

- Common mode Gain:
- If we apply two input voltages which are equal to the differential amplifier then ideally output voltage must be zero. But it is not the case in practical amplifier because output of differential amplifier not only depends on the difference but also depends on the average level of the 2 inputs. Average level of the 2 input signals is called as common mode signal denoted as Vc.

$$V_c = (V_1 + V_2) / 2$$

- The gain with which differential amplifier amplifies the common mode signal is called as common mode gain.

$$A_c = V_o / V_c$$

- So the total output of any differential amplifier is given as

$$V_o = A_d V_d + A_c V_c$$

Differential Amplifiers

- Common mode Rejection Ratio(CMMR)

- In common mode configuration of differential amplifier many noise signals appear as common input to the both terminals of amplifier. So it better to reject such a common signal.

- CMRR is defined as the ability of differential to reject the common mode signal. In other words it is defined as the ratio of differential mode voltage gain Ad to the common mode gain Ac.

$$CMRR = \rho = Ad / Ac$$

$$Vo = AdVd[1 + (1/CMRR)(Vc/Vd]$$

The above formula is used to calculate the output voltage of differential amplifier.

Differential Amplifiers

- Features of Differential Amplifiers
- Features of Differential Amplifier:
- Differential voltage gain is high
- Common mode gain is low
- CMRR (common mode rejection ratio) is high
- Input impedance is high
- Wide bandwidth
- Low offset voltages and currents
- Output impedance is low

Transistorized differential amplifier

- Differential amplifier basically uses emitter biased circuits which are identical in characteristics. This differential amplifier is also called emitter coupled differential amplifier. The below figure shows the circuit diagram of differential amplifier.

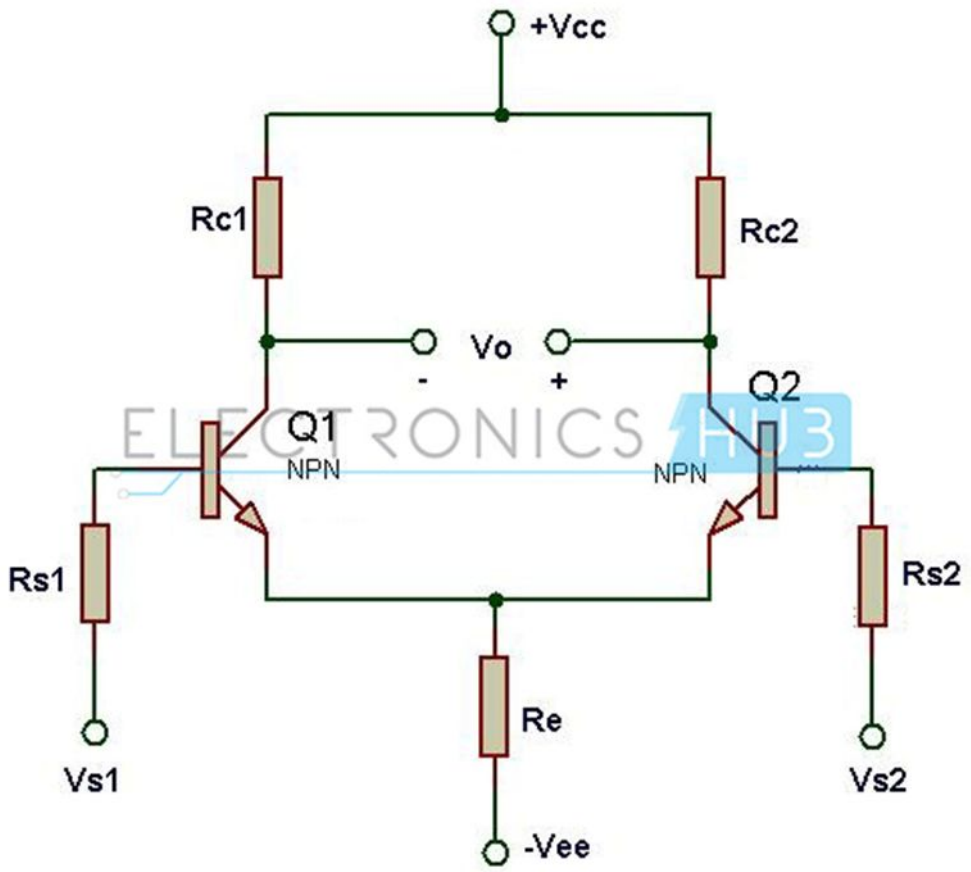

Transistorized differential amplifier

- Input1 of differential amplifier is connected to the base of transistor Q1 and input2 of the differential is connected to the base of another transistor. VCC and VEE are the two supplies for differential amplifier. The circuits works proper even with a single supply voltage. If you want to run the differential amplifier with a single supply then connect VCC to supply voltage and VEE

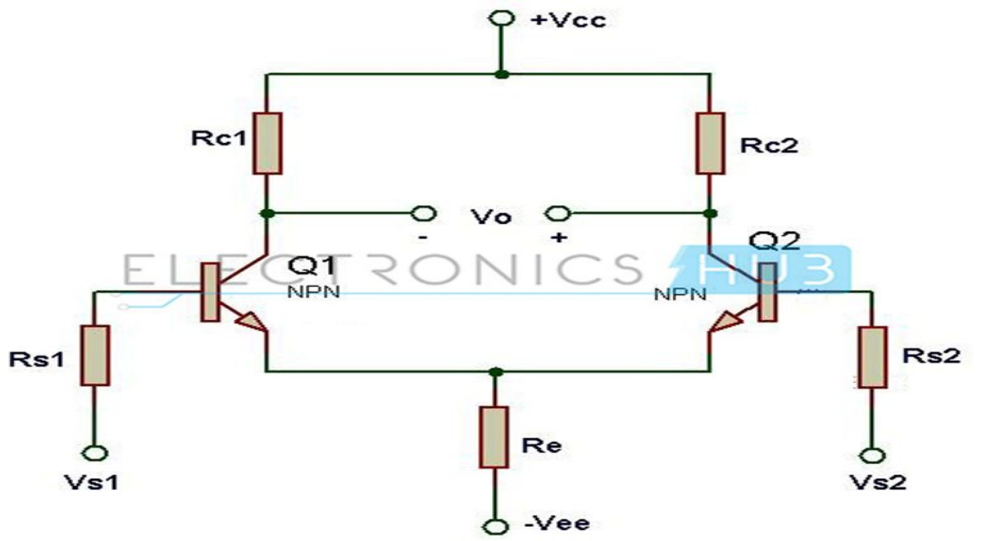

Transistorized differential amplifier

- If input signal is applied to the base of transistor Q1 then there is voltage drop across collector resistor Rc1 so the output of the transistor Q1 is low. When there is no input voltage to the transistor Q1, the voltage drop across resistor Rc1 is very less as a result output transistor Q1 is high.
- When transistor Q1 is turned on, the current through the emitter resistor Re increases as emitter current Ie is almost equal to the collector current Ic. As a result voltage drop across resistor Re increases and makes emitter of both transistors positive. In this condition transistor Q2 does not conducts as there is no base voltage. As a result collector voltage of transistor Q2 is high. Hence it is clear that the output is produced at the collector of transistor Q2 when an input is applied to the base of Q1.

Transistorized differential amplifier

- Transistors Q1 and Q2 have the exactly same characteristics. The two collector resistors are equal while the 2rwo emitter resistances Re1 and Re2 are also equal.
- Rc1 = Rc2 and Re1 = Re2.
- The magnitudes of supply voltages +Vcc and -Vee also same. If the input voltages Vs1 and Vs2 are equal then emitter currents Ie1 and Ie2 are also equal.
- If Vs1 = Vs2 then Ie1 = Ie2.

Transistorized differential amplifier

- Total emitter current is given as
- $I_e = I_{e1} + I_{e2}$
- $V_e = V_b - V_{be}$.
- $V_{c1} = V_{c2} = V_{cc} - I_cR_c$ assuming collector resistances $R_{c1} = R_{c2} = R_c$.

Transistorized differential amplifier

- **Differential Amplifier Applications:**
- Differential amplifier is used as voltage comparator.
- It is used in voltage subtractors.
- Used in operational amplifiers to amplify the input signal.
- Differential amplifier is used as a voltage follower.

Block Diagram of Op-Amp

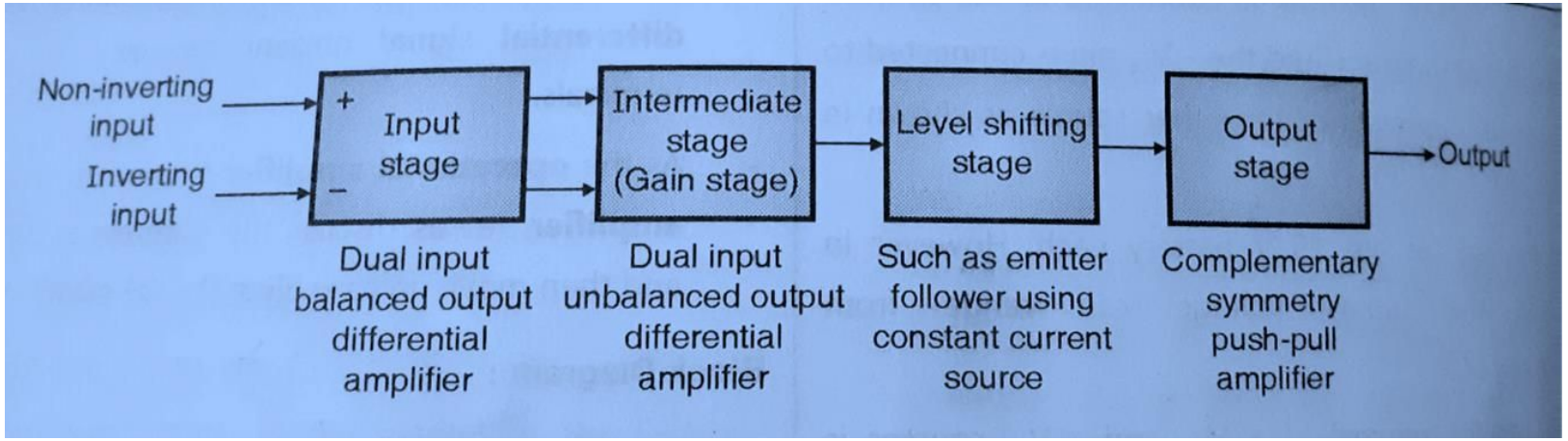

- An OP-AMP is a multistage amplifier which is represented as block diagram shown in figure
- OP-AMP is basically a differential amplifier i.e. it will amplify the voltage which is differentially present between its input terminals
- **Input Stage:** Input stage is a dual-input, balanced output differential amplifier. The two input terminals are inverting and non-inverting input terminals. This stage provides most of the voltage gain, high input impedance and low output impedance
- **Intermediate stage (Gain stage):** This stage is dual-input unbalanced output (single ended output) differential amplifier with high voltage gain and moderately high input and output impedances
- **Level Shifting Stage:** Due to direct coupling the input of level shifting stage is an amplified signal with some non-zero dc level. Level shifting stage is used to bring this dc level to zero volts with respect to ground.
- **Output Stage:** This stage is output stage used to increase the magnitude of voltage and raise the current supplying capacity of the OP-AMP. It also ensures that the output resistance of OP-AMP is low.

OP-AMP Symbol and terminals:

An OP-AMP 2 input terminals, one output Terminal and 2 supply voltage terminals as shown in Figure 1

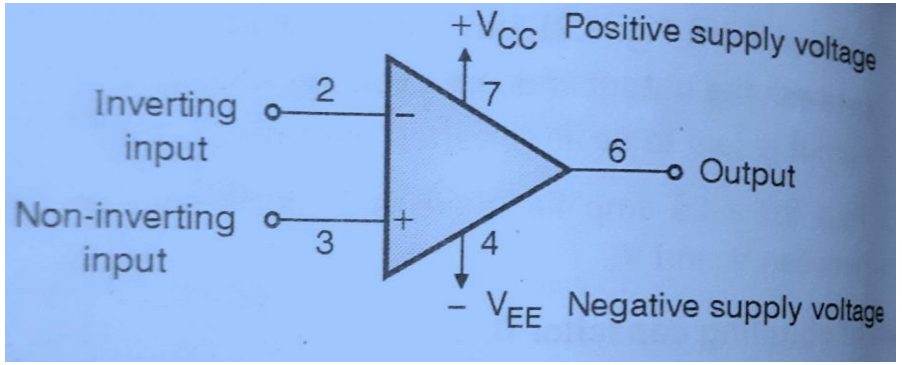

Figure 1:Symbol of Op-Amp

The input terminal marked with positive sign
is called as non-inverting terminal.
If we connect input signal to this terminal, then the amplified output signal is in phase with the input signal as shown in figure 2

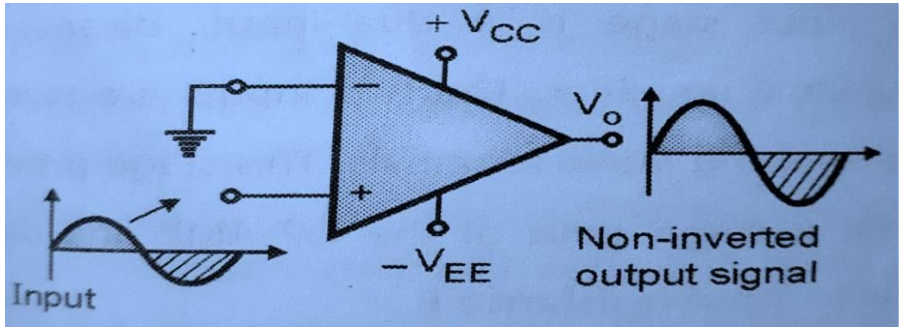

Figure 2:Non-Inverting Input Terminal

The input terminal marked with negative sign is called as inverting terminal.
If we connect input signal to this terminal, then the amplified output signal is 180° out of phase with respect to the input signal as shown in figure 3

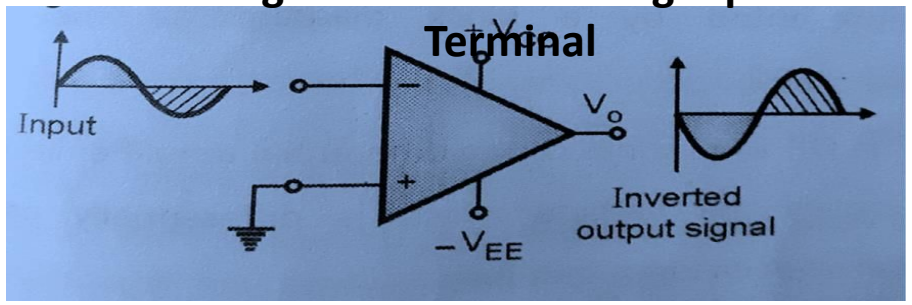

Figure 3:Inverting Input Terminal

OP-Amp Parameters

Parameter	Symbol	Ideal	Practical
Open loop vol gain	Av	∞	20,000
i/P resistance	Ri	∞	2MΩ
o/p resistance	Ro	0	75Ω
I/p offset voltage	Vios	0	1.2 to 2 mv
o/p offset voltage	Voos	0	
I/p offset current	Iios	0	20nA
i/p bias current	IB	0	80nA
Common Mode Rejection Ratio	CMRR	∞	80 db
Slew rate	SR	∞	0.5 V/µs
Bandwidth	BW	∞	1Mhz

Parameters of an Ideal OP-APM

1. **Infinite Voltage gain ($A_v = \infty$):** Open loop gain is the differential voltage gain. Open loop gain of an ideal op-amp is ∞.
2. **Infinite input resistance ($R_i = \infty$):** As input resistance of an op-amp is zero the current flowing in each input terminal will be zero ($I_1 = I_2 = 0$). Almost any source can drive it and source will not be loaded.
3. **Zero offset voltage:** In practical op-amp a small output voltage is present even though both the inputs $V_1 = V_2 = 0\ volts$**.** This voltage is called as offset voltage. For ideal op-amps the offset voltage is zero. That means output voltage is zero when input voltage is zero.
4. **Infinite Common Mode Rejection Ratio (CMRR):** For an op-amp, the common mode rejection ratio is the ratio of differential gain to the common mode gain.

$$CMRR = \frac{A_d}{A_{cm}}$$

CMRR indicates capability of an op-amp to reject common mode signal such as noise.

CMRR should be ∞ for an ideal op-amp means that common mode gain is zero

5. **Infinite Bandwidth:** Bandwidth of an ideal op-amp is infinite. So it is capable of amplifying the signals having a frequency right from 0 to ∞.

6. **Infinite Slew Rate:** Slew rate is defined as the maximum rate of change of output voltage per unit time. Slew rate decides the capability of op-amp to change its output rapidly, hence it decides highest frequency of operation of op-amp. Slew rate should be ideally infinite.

$$\boldsymbol{SR = \left.\frac{dV_0}{dt}\right|_{max}}$$

7. **Zero Power supply rejection ratio (PSRR):** The change in an op-amps input offset voltage due to variation in the supply voltage is called Power supply rejection ratio (PSRR). The value of PSRR ideally should be zero.

$$PSRR = \frac{\Delta V_{ios}}{\Delta V} = \frac{change\ in\ input\ offset\ voltage}{change\ in\ supply\ voltage}$$

8. **Zero Output Resistance ($\boldsymbol{R_0 = 0}$):** The output resistance R_0 of an ideal op-amp is zero. Due to zero output resistance, the ideal op-amp can drive infinite number of other devices

Op-Amp Parameters

Input Bias Current

$$I_{bias} = \frac{I_{B1} + I_{B2}}{2}$$

Ideally should be zero

The dc current required by the inputs of the amplifier to properly operate the first stage.

Is the average of both input currents

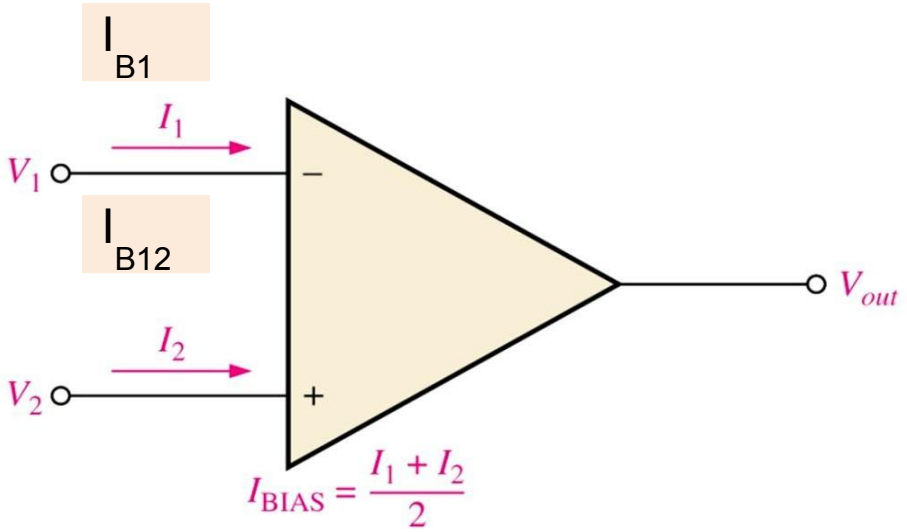

Input Bias Current

Range	10 to 100 nA	for BJT
Range	1 to 10 pA	for JFET

Reason : It is undesirable voltage drop in the resistors forming feedback network

Op-Amp Parameters

- **Input Offset Current (I_{OS})**
  - Is the difference of input bias currents

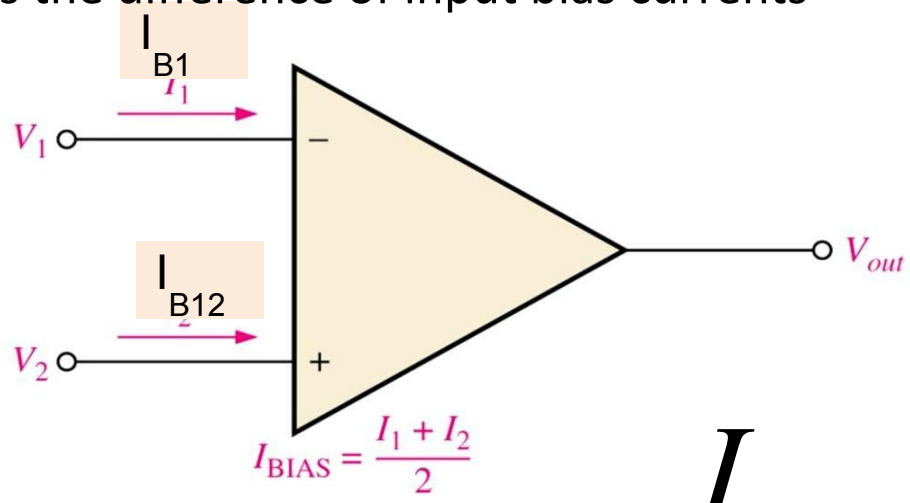

$$I_{OS} = I_{B1} - I_{B2}$$

Reason : It is due to lack of perfect symmetry in input differential stage

Input Offset Current (I_{OS})

Range20 to 60 nA for BJT

Ios Temperature Re*lation*

Input Offset Current Drift

$$= \frac{\Delta I_{OS}}{\Delta T}$$

Op-Amp Parameters

Input Impedance

Is the total resistance between the inverting and non-inverting inputs.
Differential input impedance : total resistance between the inverting and non-inverting inputs
Common-mode input impedance: total resistance between each input and ground

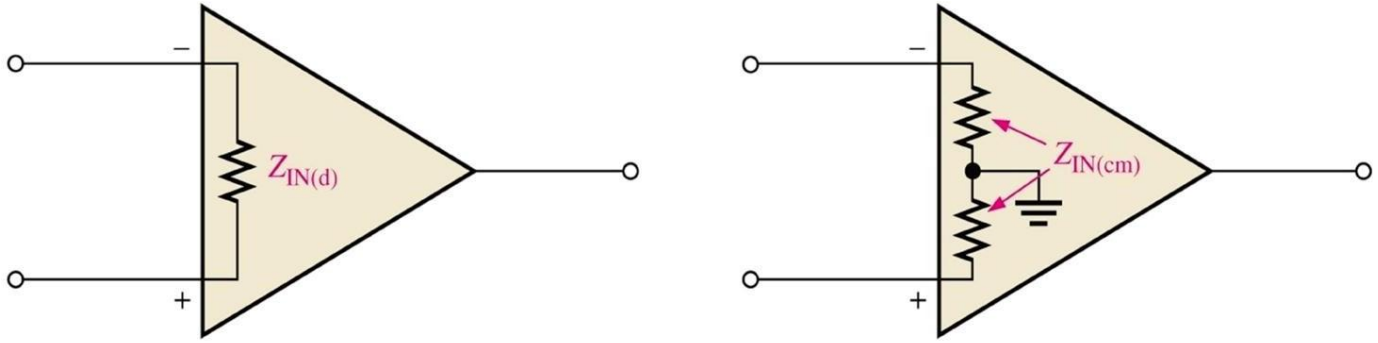

(a) Differential input impedance (b) Common-mode input impedance

Range 100 kΩ to 1 MΩ

Op-Amp Parameters

Output Impedance

Ideally should be zero

Is the resistance viewed from the output terminal of the op-amp. In reality, it is non-zero.

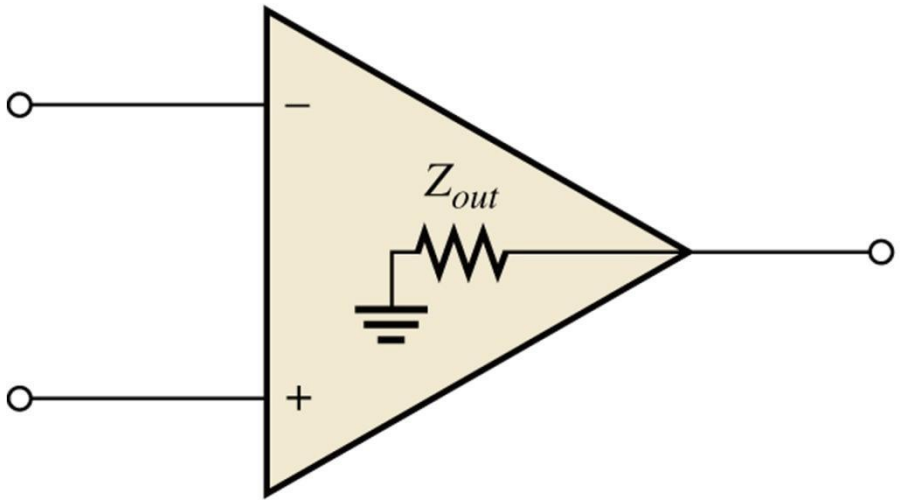

Range 40 kΩ to 100 Ω

Op-Amp Parameters

Slew Rate

Is the maximum rate of change of the output voltage in response to a step input voltage.

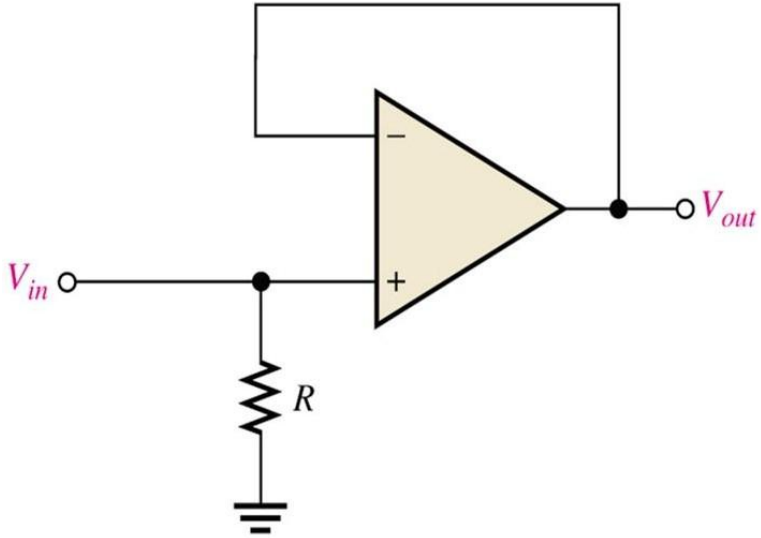

(a) Test circuit

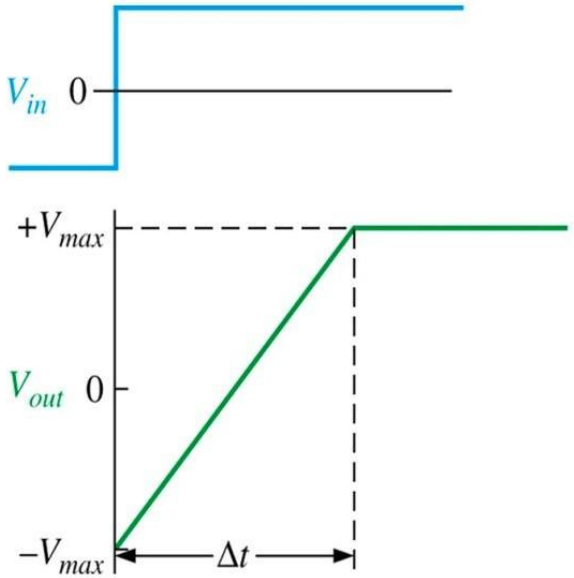

(b) Step input voltage and the resulting output voltage

$$SlewRate = \frac{\Delta V_{out}}{\Delta t}$$

where $\Delta V_{out} = +V_{max} - (-V_{max})$

Op-Amp Parameters

Slew Rate

It's a measure of how fast the output can "follow" the input signal.

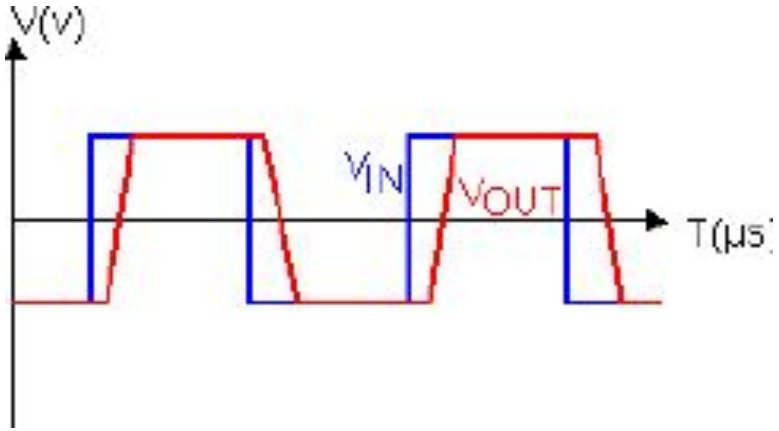

Range 50 mV/µSec to 500 mV/µSec

Realistic assumptions of Op-Amp

Virtual ground

Ex o/p vol 10V

$A = V_o/V_{id}$

$V_{id} = V_o/A = 10/20{,}000 = 0.05\text{mv}$

Zero i/p current

$I_i = V_{id}/R_i = 0.05/2M = 0.25\ \text{nA}$

$(V_1 - V_2) = V_o/A$

$V_1 - V_2 = 0$

$V_1 = V_2$

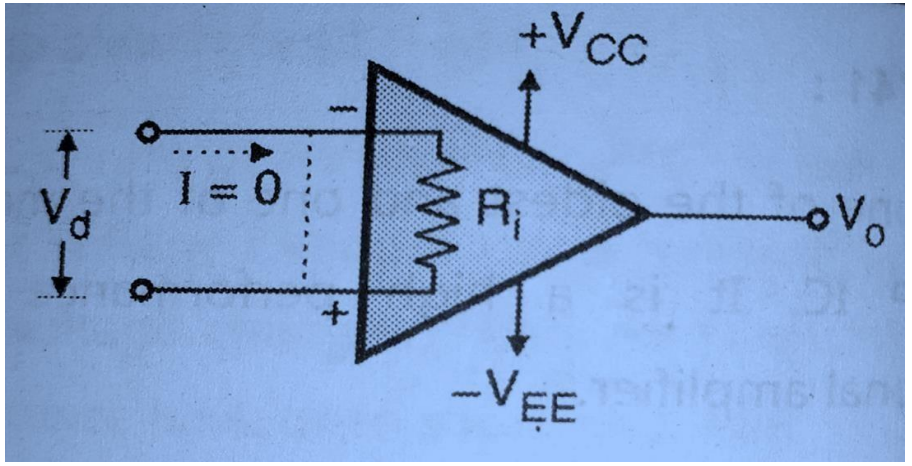

Concept of Virtual Short

Concept of Virtual Short:

Assume that op-amp is ideal one. The input impedance of an op-amp is infinite.

- Hence current 'I' flowing from one input terminal to the other will be zero.
- Thus voltage drop across R_i will be zero and both the input terminals will be at the same potential. In other words they are virtually shorted to each other.
- The output voltage of op-amp is

$$V_0 = A_v V_d$$

$$V_d = \frac{V_0}{A_v}$$

- But $A_v = \infty$ for ideal op-amp hence $V_d = 0$
- Thus the potential difference between input terminals is zero. In other words they are equipotential or virtually shorted

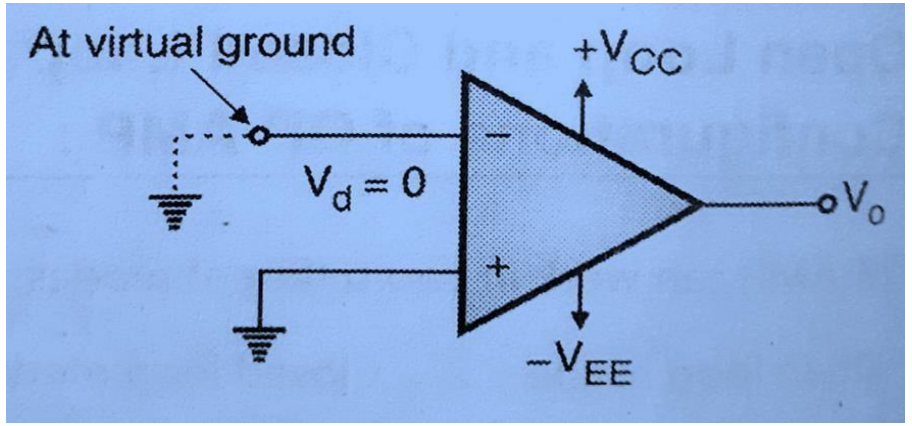

Concept of Virtual Ground

Concept of Virtual Ground

- If non-inverting input terminal of op-amp is connected to ground then due to "virtual short" between two input terminals the inverting (-ve) terminal will be connected to ground. Hence it is said to be at virtual ground.

opamp i/p modes & parameters

i/p signal modes

single ended i/p — 1 i/p is grounded

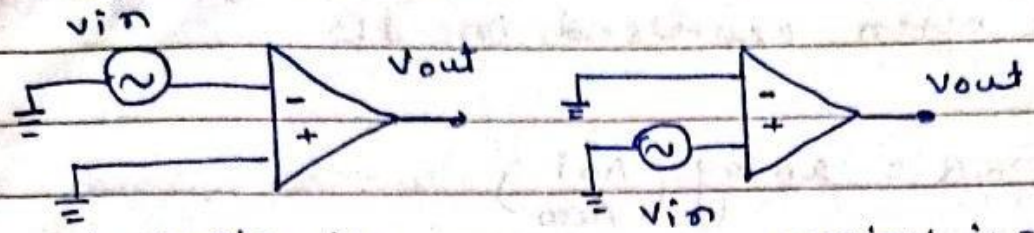

inverting i/p — noninv. i/p

Differential i/p or double ended

" mode

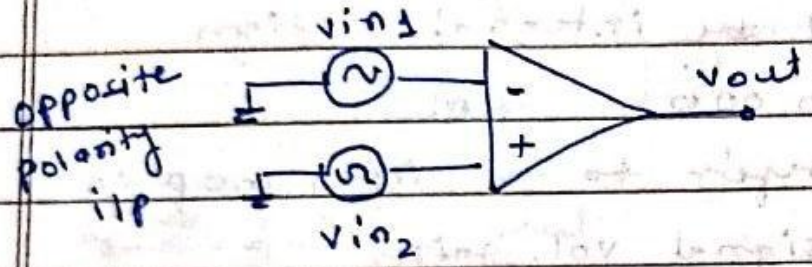

= Amplified diff betn the two i/ps

common mode i/p or common mode

Two signal same phase, freq & amplitude

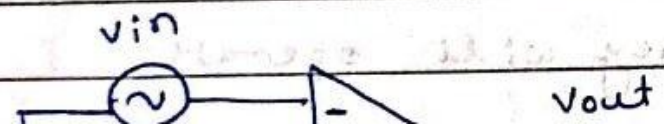

Open loop and Close loop configuration Op-Amp

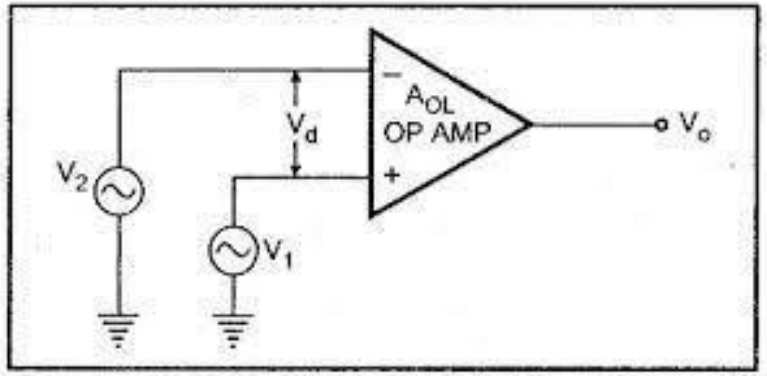

Fig. 2.13 Open loop operation of an op-amp

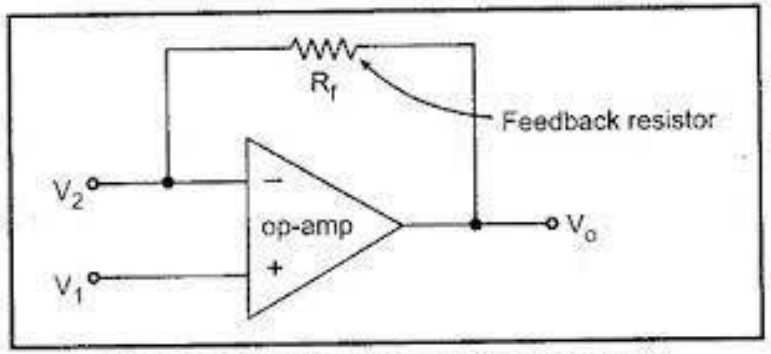

Fig. 2.15 Op-amp with negative feedback

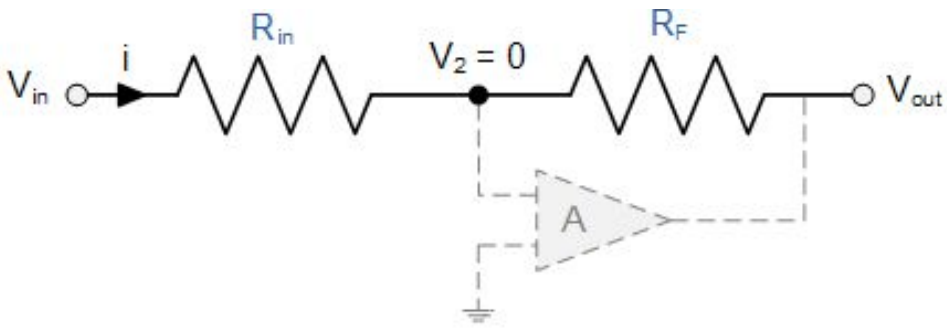

Inverting Amplifier

$$i = \frac{Vin - Vout}{Rin + Rf}$$

$$\text{therefore, } i = \frac{Vin - V2}{Rin} = \frac{V2 - Vout}{Rf}$$

$$i = \frac{Vin}{Rin} - \frac{V2}{Rin} = \frac{V2}{Rf} - \frac{Vout}{Rf}$$

$$\text{so, } \frac{Vin}{Rin} = V2\left[\frac{1}{Rin} + \frac{1}{Rf}\right] - \frac{Vout}{Rf}$$

$$\text{and as, } i = \frac{Vin - 0}{Rin} = \frac{0 - Vout}{Rf} \qquad \frac{Rf}{Rin} = \frac{0 - Vout}{Vin - 0}$$

and as, $i = \frac{Vin - 0}{Rin} = \frac{0 - Vout}{Rf}$ $\frac{Rf}{Rin} = \frac{0 - Vout}{Vin - 0}$

the Closed Loop Gain (Av) is given as, $\frac{Vout}{Vin} = -\frac{Rf}{Rin}$

Then, the **Closed-Loop Voltage Gain** of an Inverting Amplifier is given as.

$$\text{Gain (Av)} = \frac{V_{out}}{V_{in}} = -\frac{R_f}{R_{in}}$$

and this can be transposed to give Vout as:

$$Vout = -\frac{Rf}{Rin} \times Vin$$

Equivalent Potential Divider Network

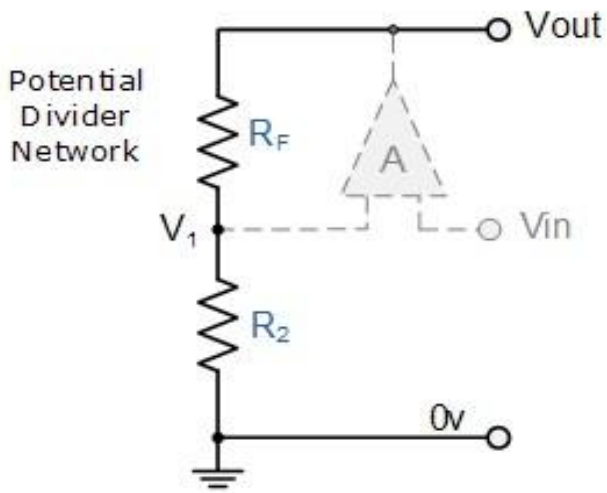

Non inverting Amp

Then using the formula to calculate the output voltage of a potential divider network, we can calculate the closed-loop voltage gain (A_V) of the **Non-inverting Amplifier** as follows:

$$V_1 = \frac{R_2}{R_2 + R_F} \times V_{OUT}$$

$$\text{Ideal Summing Point: } V_1 = V_{IN}$$

$$\text{Voltage Gain, } A_{(V)} \text{ is equal to: } \frac{V_{OUT}}{V_{IN}}$$

$$V_1 = \frac{R_2}{R_2 + R_F} \times V_{OUT}$$

Ideal Summing Point: $V_1 = V_{IN}$

Voltage Gain, $A_{(V)}$ is equal to: $\frac{V_{OUT}}{V_{IN}}$

Then, $A_{(V)} = \frac{V_{OUT}}{V_{IN}} = \frac{R_2 + R_F}{R_2}$

Transpose to give: $A_{(V)} = \frac{V_{OUT}}{V_{IN}} = 1 + \frac{R_F}{R_2}$

Then the closed loop voltage gain of a **Non-inverting Operational Amplifier** will be given as:

$$A_{(v)} = 1 + \frac{R_F}{R_2}$$

Inverting amplifier circuit and its working:

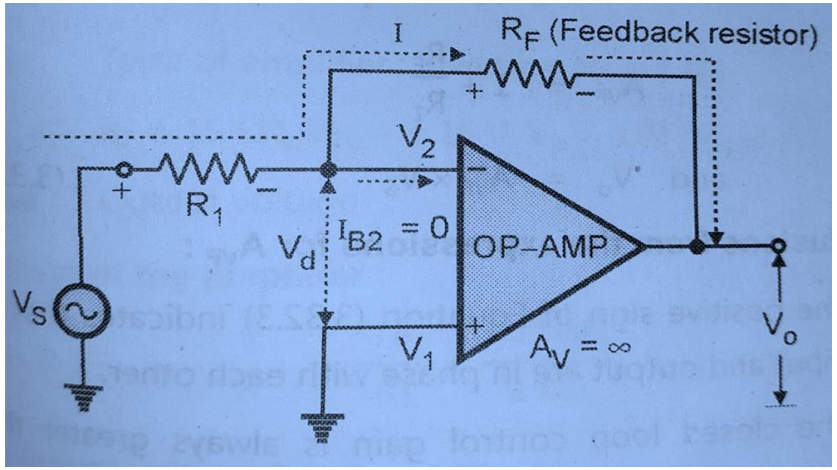

Figure 1: Inverting Amplifier

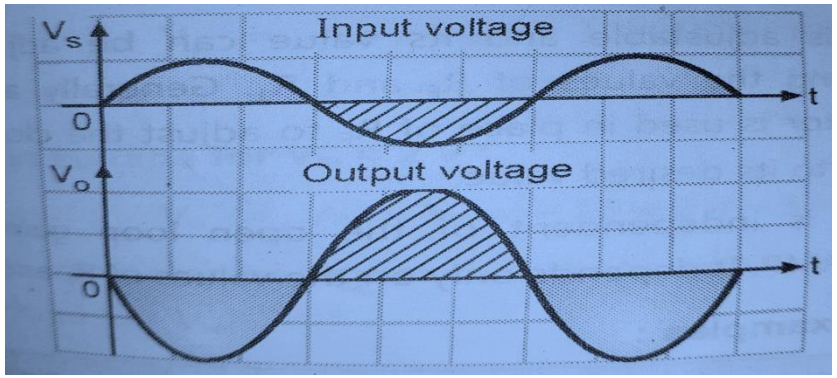

Figure 2: Input and Output waveform

- A signal to be amplified V_s is connected to the inverting terminal of op-amp, the amplified output signal will be 180° out of phase with the input as shown in Figure 2. Hence this amplifier is known as inverting amplifier.
- Resistor R_F connected between output and inverting terminal is called as the feedback resistor, It produces negative feedback.
- Non-inverting terminal is connected to ground $V_1 = 0\ volts$. Due to virtual ground, $V_2 = 0\ volts$
- The input voltage V_s is given by $V_s = IR_1$
- And the output voltage $V_0 = -IR_F$
- Closed loop gain is $A_{vf} = \frac{V_0}{V_s}$
- Substituting expression of V_s and V_0 we get

$$A_{vf} = \frac{-IR_F}{IR_1} = -\frac{R_F}{R_1}$$

- The negative sign indicates that there is 180° phase shift between input and output.
- Value of gain A_{vf} can be easily adjusted by adjusting the values of resistors R_F and R_1.

Non-Inverting amplifier circuit and its working:

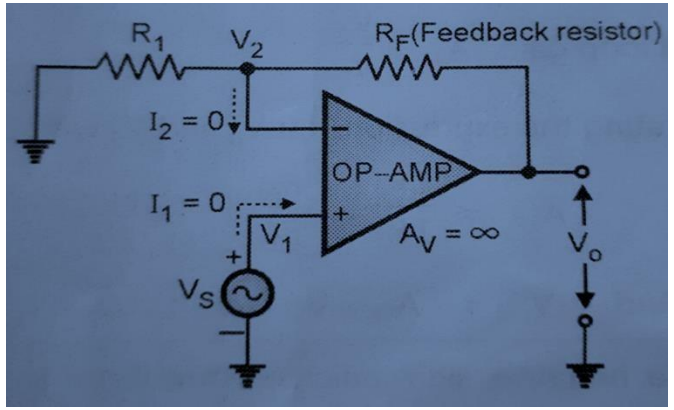

Non-inverting amplifier

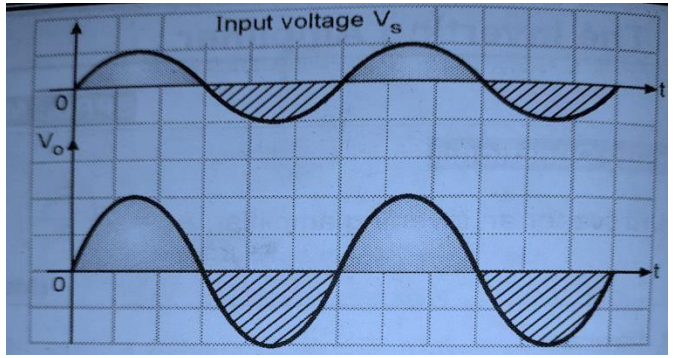

Input and Output waveforms

- As signal to be amplified V_s is connected to the non-inverting terminal of op-amp, the amplified output signal will be in phase (similar) with the input as shown in Figure 2. Hence this amplifier is known as non-inverting amplifier.
- Resistor R_F connected between output and inverting terminal is called as the feedback resistor, It produces negative feedback.
- Inverting terminal is connected to ground through resistor R_1
- For ideal op-amp, input resistance $R_i = \infty$. Therefore, the currents entering into both the input terminals of op-amp will have a zero value ($I_1 = I_2 = 0$).
- Therefore voltage across R_1 is given by $V_2 = \frac{R_1}{R_1+R_F} V_0$
- As per virtual short concept $V_1 = V_2 = V_s$

$$\therefore V_s = \frac{R_1}{R_1 + R_F} V_0$$

- Closed loop gain is $\boldsymbol{A_{vf}} = \frac{V_0}{V_s} = \frac{R_1}{R_1+R_F} = \boldsymbol{1}$
- The positive sign indicates that there is no phase shift between input and output.
- Value of gain A_{vf} can be easily adjusted by adjusting the values of resistors R_F and R_1.

Ideal Voltage transfer characteristics of OP-AMP

- **Ideal Voltage Transfer Curve of Op Amp** – The ideal op-amp produces the output proportional to the difference between the two input voltages.
- The graphical representation of this statement gives the voltage transfer curve.
- It is the graph of output voltage Vo plotted against the difference input Voltage Vd, assuming gain constant. This graph is called **transfer characteristics of the op-amp**.

Ideal Voltage transfer characteristics of OP-AMP

- Thus note that the op-amp output voltage gets saturated at $+V_{CC}$ and $-V_{EE}$
- it can not produce output voltage more than $+V_{CC}$ and $-V_{EE}$. Practically saturation voltages $+V_{sat}$ and $-V_{sat}$ are slightly less than $+V_{CC}$ and $-V_{EE}$.

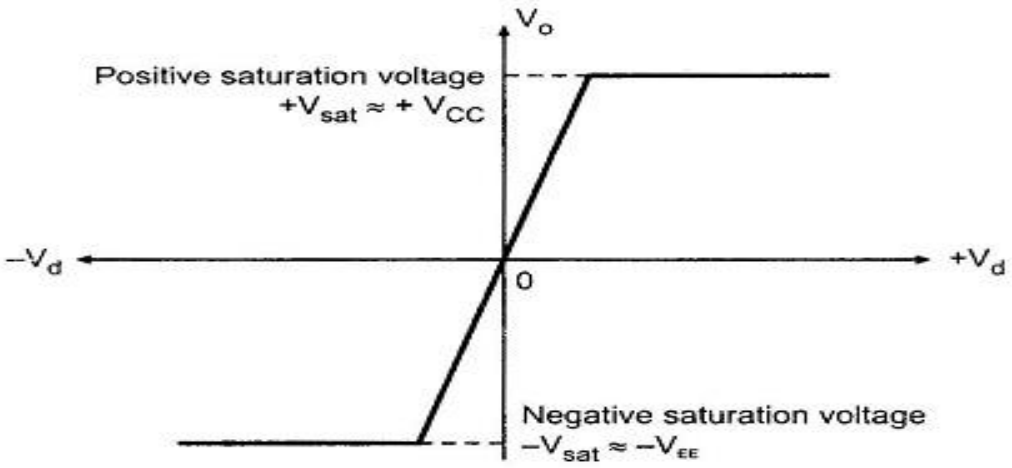

Fig. 2.7 Ideal voltage transfer curve

VPCOE

(1) for inv. opamp $R_f = 100k\Omega$ $R_1 = 10k\Omega$ $V_{cc} \pm 10V$

$V_i = 2V\,dc$ $V_o = ?$ is it practically possible

$V_o = -\frac{R_f}{R_1} \cdot V_i = -20V$ no

$V_{omax} = -V_{osat}$

$V_{sat} = 0.9\,V_{cc} = -9V$

(2) inv. $R_1 = 1k\Omega$ $R_f = 15k\Omega$, $V_{cc} = \pm 12V$

V_o for $V_{in} = 120mV$ $V_{in} = 2V$

$A_{vf} = -\frac{R_f}{R_1} V_{in}$ 1.8V −30V

(3) Non inv $R_1 = 1k$ $R_f = 10k$ $V_{cc} \pm 12V$

$V_{in} = 100V$, $V_{in} = 3V$.

$A_{vf} = \left(1 + \frac{R_f}{R_1}\right) V_{in}$.

1100 33V

(4) Non inv $R_1 = 1k\Omega$ $R_f = 10k$ $V_{cc} \pm 15V$

$V_{in} = 200mV$ $V_{in} = 5V$

Summing Amplifier

- Summing amplifiers are two types

  i) Inverting summing amplifiers

  ii) Noninverting summing amplifiers

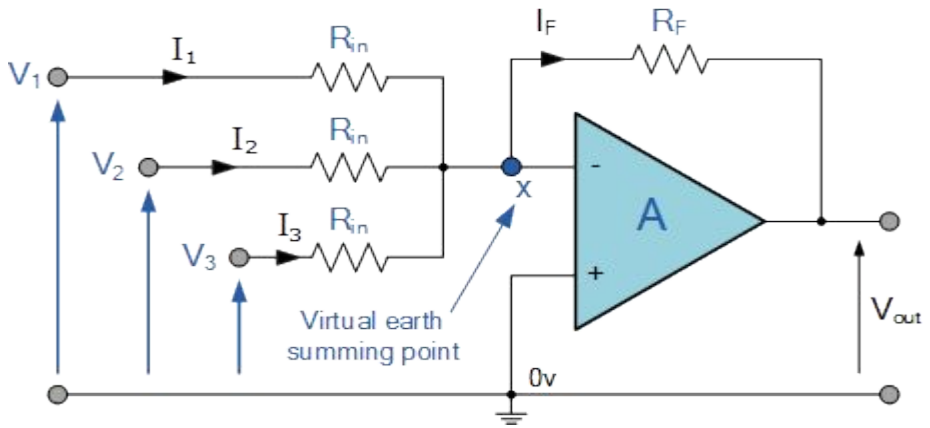

- Inverting summing Amplifiers:
- Input voltages V_1, V_2 and V_3 are connected to the inverting terminal with three resistors R_1, R_2 and R_3 .
- Non inverting terminal is connected to the ground point.
- Feedback resistor R_f connected between output terminal and inverting terminal of op Amp.
- The analysis is carried out assuming op amp is ideal one $A_d = \infty$ and $R_i = \infty$

Summing Amplifier

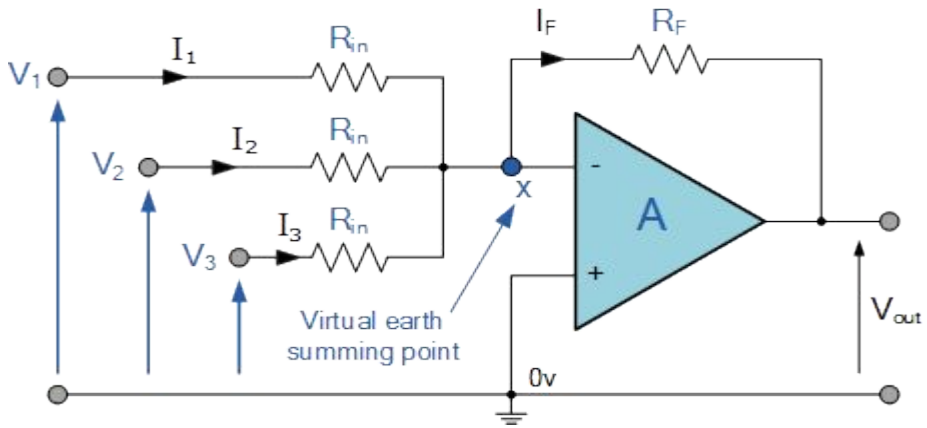

- Voltage at x is zero because of virtual Short characteristics of op Amp
- If I_1, I_2 , I_3 and I_f are current through resistor R_1, R_2 , R_3 and R_f respectively .
- If V_x is the voltage at the node x
- By virtual short V_x = 0
- Current entering through inverting and non inverting terminal is zero and applying KCL at node x
- Hence

$$I_1 + I_2 + I_3 = I_f$$

$$\frac{V_1 - V_x}{R_1} + \frac{V_2 - V_x}{R_2} + \frac{V_3 - V_x}{R_3} = \frac{V_x - V_{out}}{R_f}$$

$$\frac{V_1 - 0}{R_1} + \frac{V_2 - 0}{R_2} + \frac{V_3 - 0}{R_3} = \frac{0 - V_{out}}{R_f}$$

$$\frac{V_1}{R_1} + \frac{V_2}{R_2} + \frac{V_3}{R_3} = \frac{-V_{out}}{R_f}$$

Summing Amplifier

: $V_{out} = -\{ \frac{R_f}{R_1} V_1 + \frac{R_f}{R_2} V_2 + \frac{R_f}{R_3} V_3 \}$

In special case if $R_1 = R_2 = R_3 = R_f$

$V_{out} = -(V_1 + V_2 + V_3)$

Non Inverting Summing Amplifier:

- Input voltages V_1, V_2 and V_3 are connected to the non inverting terminal with three resistors R_1, R_2 and R_3 .
- Inverting terminal is connected to the ground point through resistor R .
- Feedback resistor R_f connected between output terminal and inverting terminal of op Amp.
- The analysis is carried out assuming op amp is ideal one $A_d = \infty$ and $R_i = \infty$

Summing Amplifier

Non Inverting Summing Amplifier:

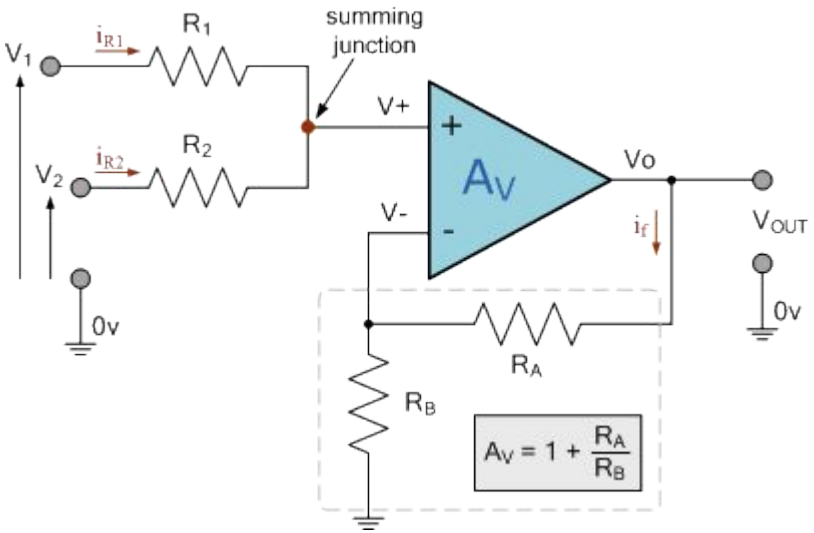

- Let us consider Voltage at summing junction is V_s and voltage across resistor R_B is V_B
- By virtual short $V_s = V_B$
- Current entering to non inverting and inverting terminal of op-Amp is zero
- Applying KCL at summing junction
- $I_{R1} + I_{R2} = 0$
- $\frac{V_1 - V_B}{R_1} + \frac{V_2 - V_B}{R_2} = 0$ ------(1)

Summing Amplifier

- Non Inverting Summing Amplifier:

- $\frac{V_1}{R_1} - \frac{V_B}{R_1} + \frac{V_2}{R_2} - \frac{V_B}{R_2} = 0$

$$\frac{V_1}{R_1} + \frac{V_2}{R_2} = \frac{V_B}{R_1} + \frac{V_B}{R_2} = \left(\frac{1}{R_1} + \frac{1}{R_2}\right) V_B$$

- $V_B = \dfrac{\frac{V_1}{R_1} + \frac{V_2}{R_2}}{\frac{1}{R_1} + \frac{1}{R_2}}$

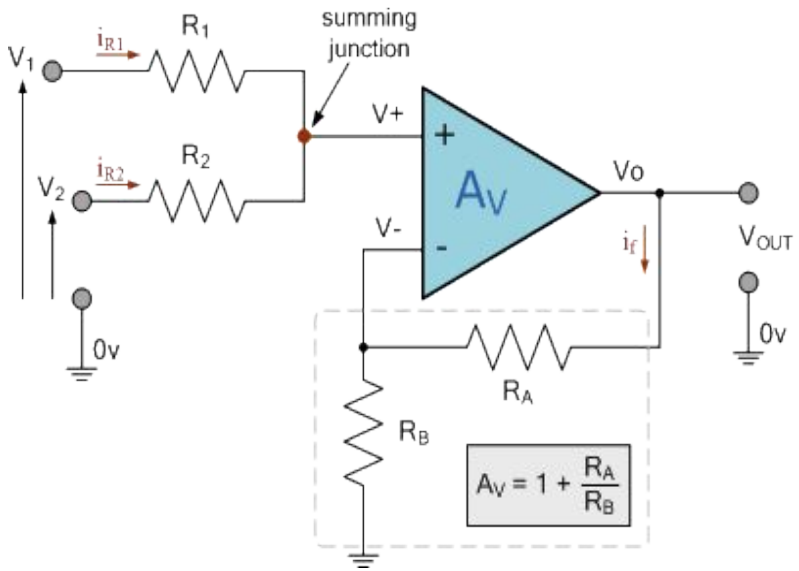

As per the output of non inverting amplifier

$$V_{out} = \left(1 + \frac{R_A}{R_B}\right) V_B$$

substituting V_B expression

$$V_{out} = \left(1 + \frac{R_A}{R_B}\right) \frac{\frac{V_1}{R_1} + \frac{V_2}{R_2}}{\frac{1}{R_1} + \frac{1}{R_2}}$$

- If $R_1 = R_2 = \frac{R_B}{2}$ then $V_{out} = V_1 + V_2$

Comparator

- Comparator is a circuit which compares a signal voltage applied at one input of an op amp with known reference voltage at the other input
- Comparator gives open loop output $+\pm V_{sat}$
- There are basically two types of comparator
- i) Inverting comparator ii) Non Inverting comparator
- There are two types of inverting comparator

1- Inverting comparator with positive reference voltage

- Input voltage is applied to inverting terminal of op amp
- Reference voltage is applied to non inverting terminal of Op amp
- Reference voltage applied is positive.

Comparator

- When V_{in} is less than V_{ref}, the voltage at non-inverting terminal is greater than voltage at inverting terminal.
- Differential voltage V_{id} positive and hence output will be in positive saturation ($+V_{sat}$)
- When Vin is greater than Vref , the voltage at inverting terminal is greater than voltage at non-inverting terminal.
- Differential voltage Vid negative and hence output will be in negative saturation(-Vsat).

Comparator

- Inverting comparator with positive reference voltage input output waveforms:

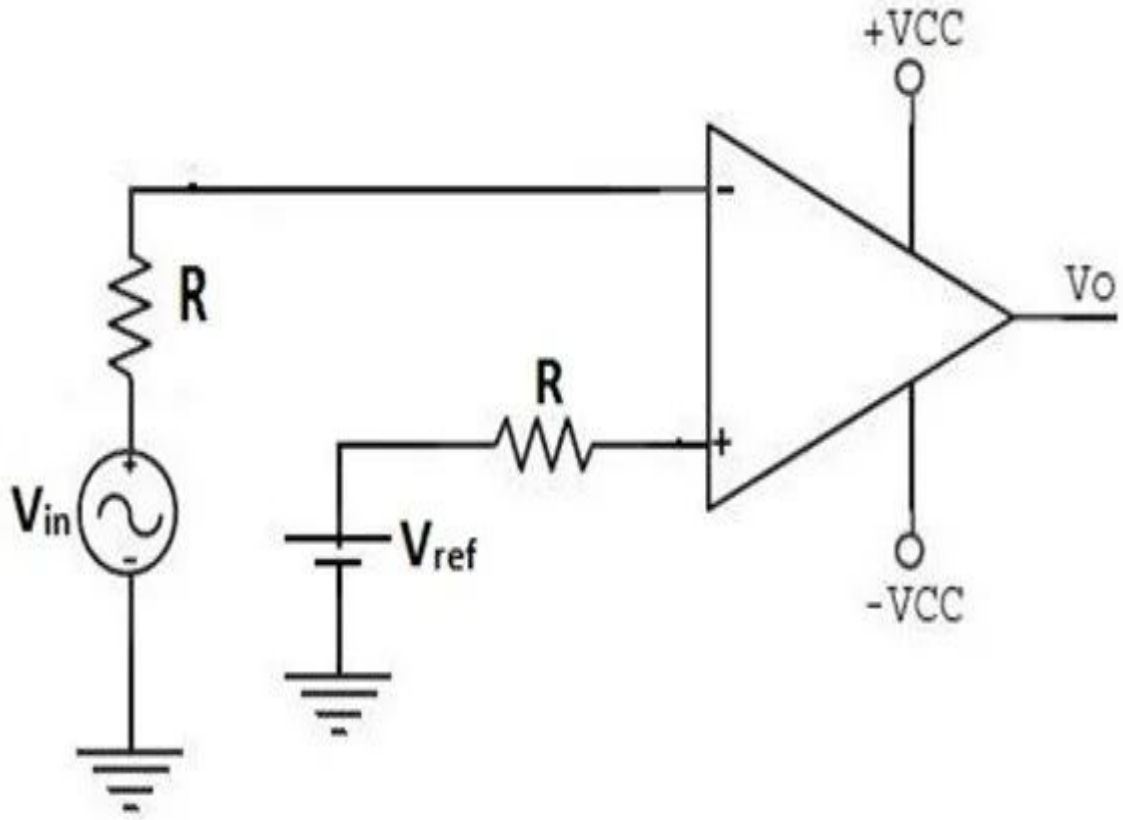

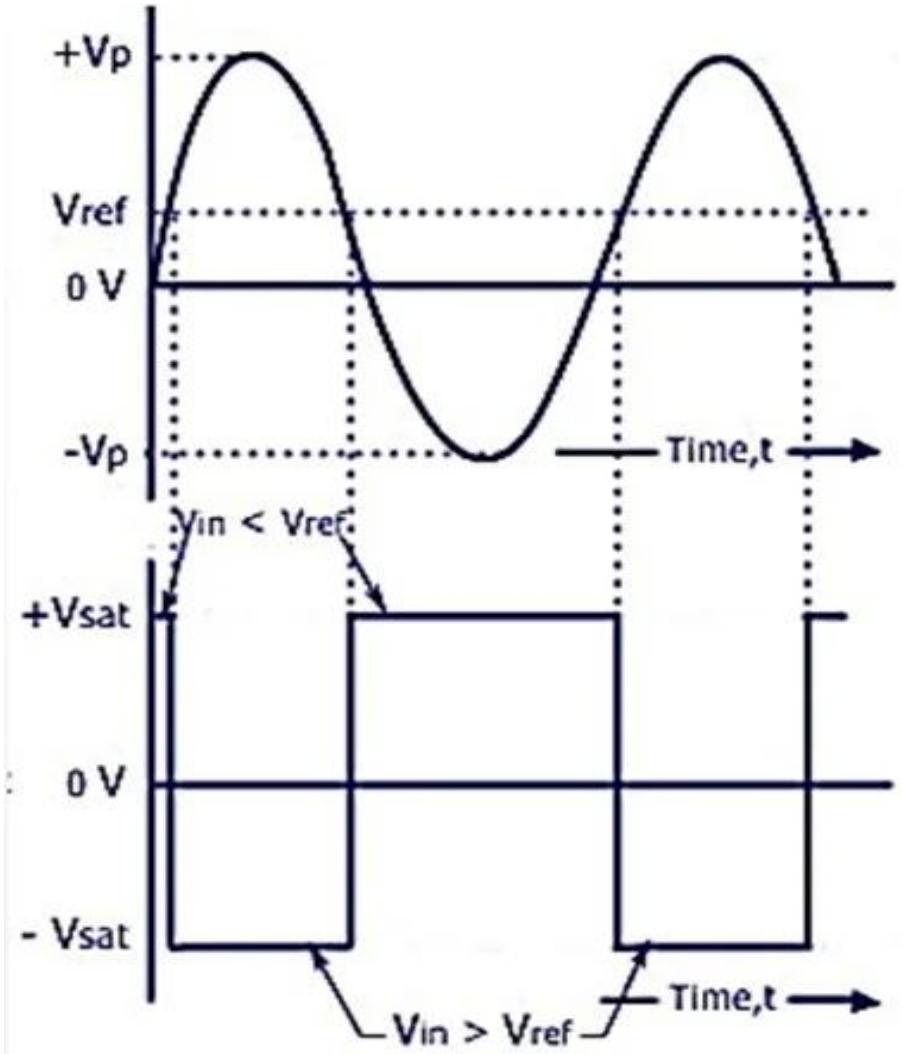

Comparator

- Inverting comparator with negative reference voltage:
- Input is applied to inverting terminal and reference voltage is applied to non-inverting terminal.
- Reference voltage applied is negative.
- When Vin is less than Vref , the voltage at non-inverting terminal is greater than voltage at inverting terminal.
- Differential voltage Vid positive and hence output will be in positive saturation (+Vsat).
- When Vin is greater than Vref , the voltage at inverting terminal is greater than voltage at non-inverting terminal.
- Differential voltage Vid negative and hence output will be in negative saturation(-Vsat)

Comparator

- Inverting comparator with negative reference voltage Input output waveforms:

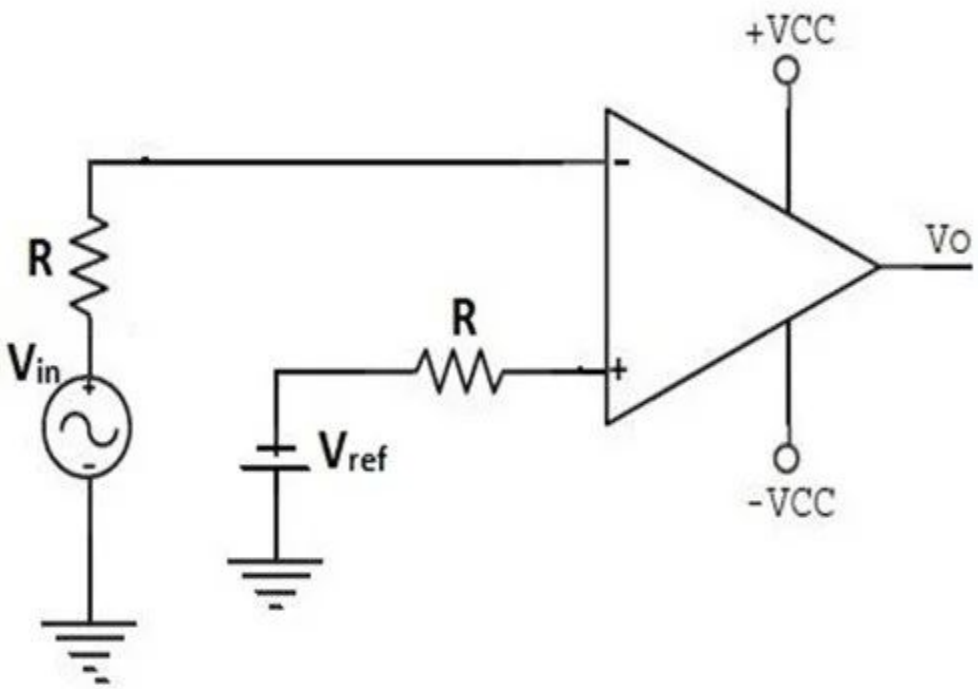

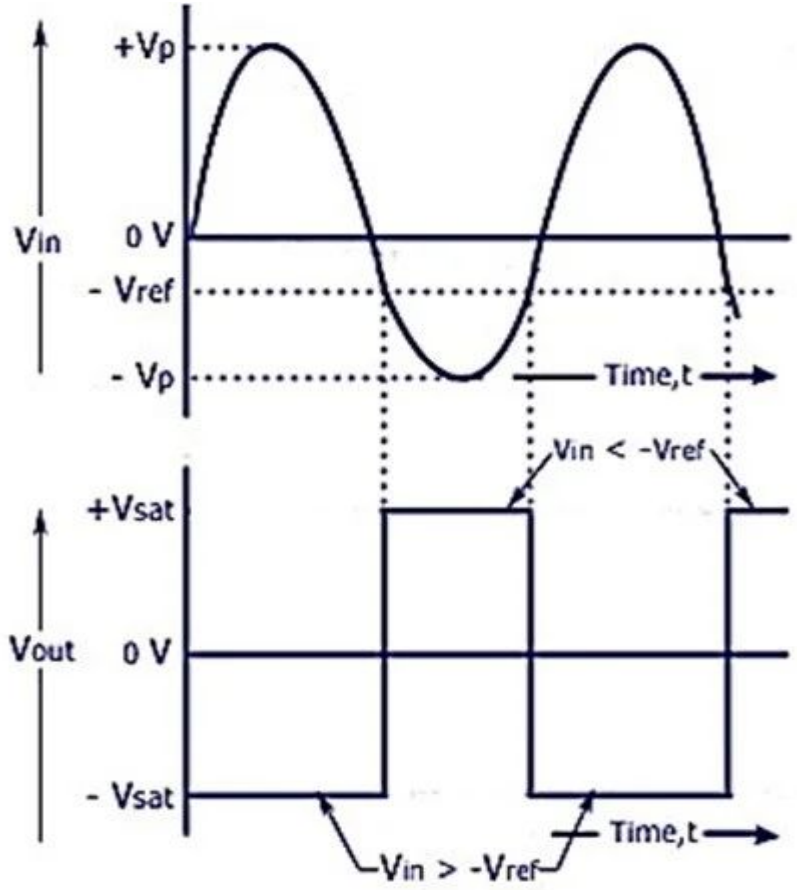

Comparator

- Non inverting comparator with +ve reference voltage :
- It is the comparator in which input is applied to non-inverting terminal and reference voltage is applied to inverting terminal.
- Reference voltage applied is positive
- When Vin is less than Vref , the voltage at non-inverting terminal is less than voltage at inverting terminal.
- Differential voltage Vid negative and hence output will be in negative saturation (-Vsat).
- When Vin is greater than Vref , the voltage at non-inverting terminal is greater than voltage at inverting terminal.
- This makes differential voltage Vid positive and hence output will be in positive saturation(+Vsat).

Comparator

- Non inverting comparator with +ve reference voltage with Input output waveforms

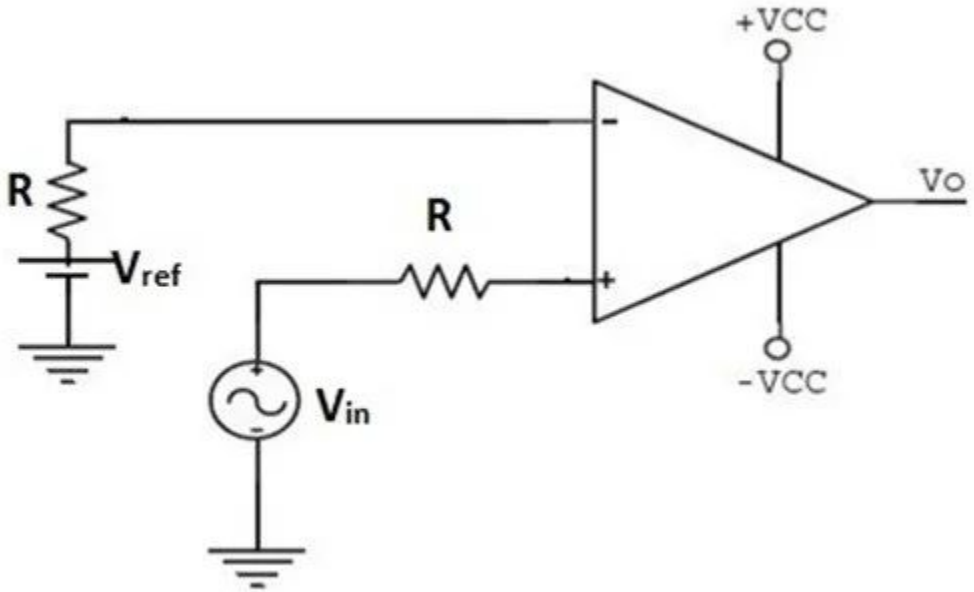

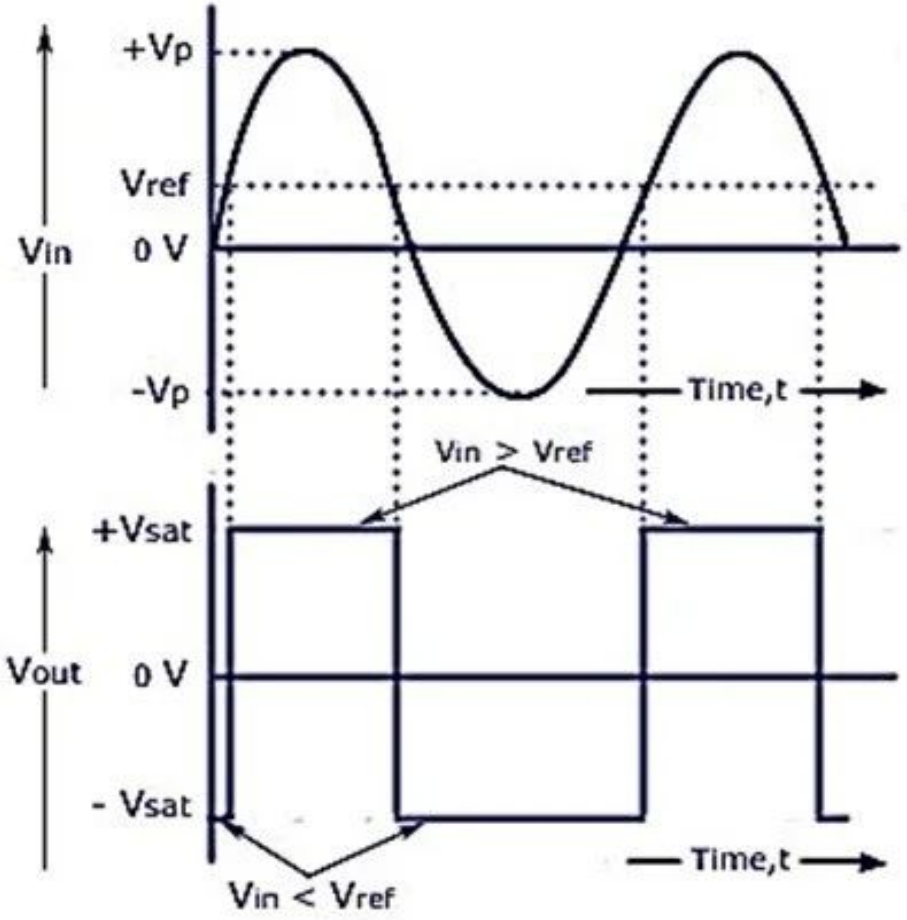

Comparator

- Non inverting comparator with -ve reference voltage
- It is the comparator in which input is applied to non-inverting terminal and reference voltage is applied to inverting terminal.
- Reference voltage applied is negative.
- When Vin is less than Vref , the voltage at non-inverting terminal is less than voltage at inverting terminal. This makes the differential voltage Vid negative and hence output will be in negative saturation (-Vsat).
- When Vin is greater than Vref , the voltage at non-inverting terminal is greater than voltage at inverting terminal. This makes the differential voltage Vid positive and hence output will be in positive saturation (+Vsat).

Comparator

- Non inverting comparator with -ve reference voltage Input output waveforms

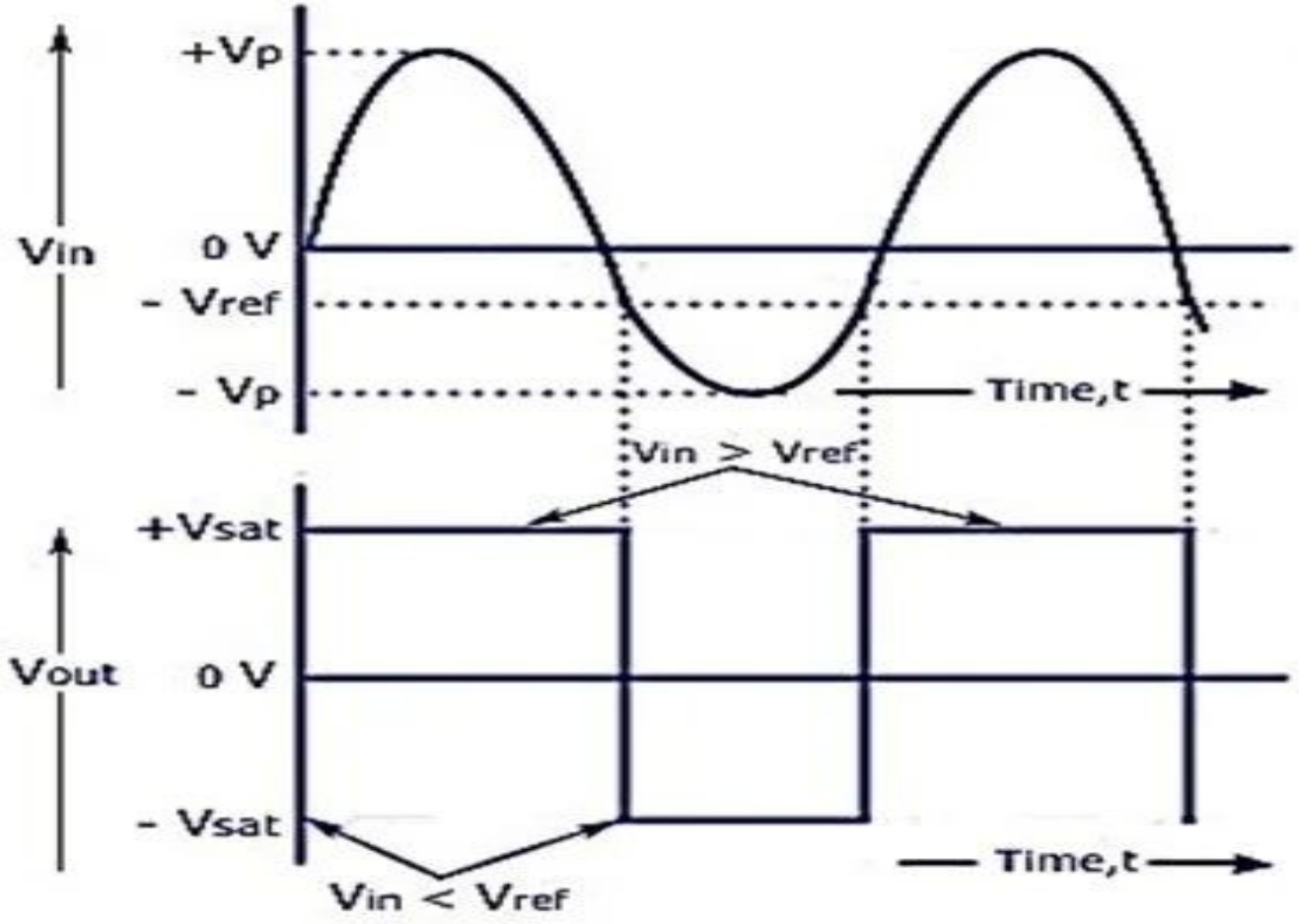

Differentiator

- The differentiator is the circuit that performs the mathematical operation differentiation.
- The output waveform is the derivative of the input waveform.
- The input voltage(V_i) is applied to inverting terminal through the capacitor C
- The feedback resistor R_f is connected between output terminal and inverting terminal of op amp.
- Non inverting terminal is connected to the ground
- By the virtual short voltage at x is $V_x = 0$
- Current entering inverting and non-inverting terminal of op amp is zero.
- Apply KCL at node x
- $I_{in} = I_f$

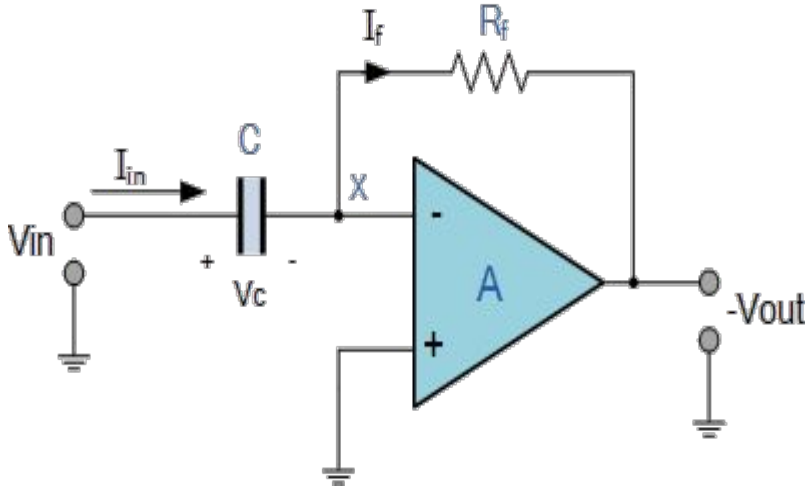

Differentiator

- But I_{in} = Current through the capacitor C = I_c
- Current through the capacitor $I_c = C\frac{d(V_i - V_x)}{dt}$ and $I_f = \frac{V_x - V_{out}}{R_f}$

$$I_{in} = I_c = C\frac{d(V_i - V_x)}{dt} = I_f = \frac{V_x - V_{out}}{R_f}$$

$$C\frac{d(V_i - 0)}{dt} = \frac{0 - V_{out}}{R_f}$$

$$V_{out} = -R_f C\frac{d(V_i)}{dt}$$

$$\boxed{V_{out} = -R_f C\frac{d(V_i)}{dt}}$$

- Minus sign indicates that output waveform is 180^0 with respect to input waveform
- Out put voltage V_{out} is (- R_fC) constant times the derivative of the input voltage.
- Hence It is a differentiator amplifier or differentiator

Integrator

- Integrator is a op-amp circuit that performs mathematical operation integration.
- Output waveform is the integration of input waveform
- Input voltage(is applied to inverting terminal of op Amp through the resistor R_{in}
- A capacitor is connected between output terminal and inverting terminal of Op- Amp
- Non inverting terminal is connected to the ground
- By the virtual short voltage at x is V_x= 0
- Current entering inverting and non inverting terminal is zero
- Applying KCL at node x
- I_{in} = I_f= I_c(current through the capacitor)
- $\frac{V_i - V_x}{R_{in}}$ = C$\frac{d(V_x - V_{out})}{dt}$
- $\frac{V_i - 0}{R_{in}}$ = C$\frac{d(0 - V_{out})}{dt}$
- $\frac{V_i}{R_{in}}$ = - C $\frac{d(V_{out})}{dt}$

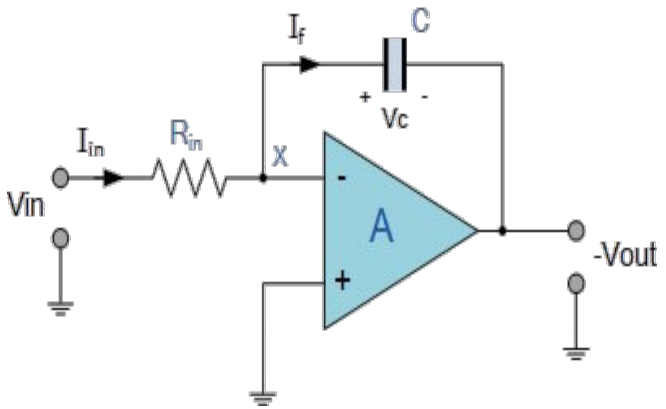

Integrator

Integrating both sides

$$\int_0^t dV_{out} = -\frac{1}{R_{in}C}\int_0^t V_i dt$$

$$V_{out} = -\frac{1}{R_{in}C}\int_0^t V_i(t)dt$$

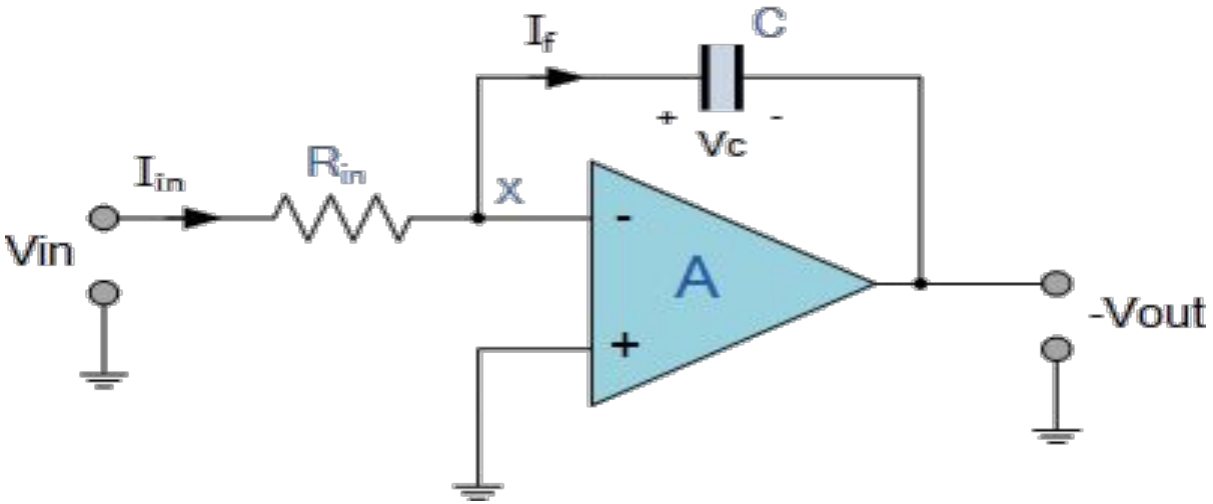

$$\boxed{V_{out} = -\frac{1}{R_{in}C}\int_0^t V_i(t)dt}$$

- output voltage is proportional to time integral of input voltage and R_{in}C is the time constant of integration.
- Output voltage is negative of input integration
- It is also called inverting integrator